AAA Mould

AAA Mould Company information
Http://www.aaa-mould.com

Tel:+86-755-29773292/29773293
Fax:+86-755-29773291-8019
E-mail: info@aaa-mould.com

Outside View of our Factory

Tel:+86-755-29773292/29773293
Fax:+86-755-29773291-8019
E-mail: info@aaa-mould.com

About US:

We are Located in Shenzhen City of China, Our company has been steadily built since 2006, and we are now beginning our new era of sustainable development.

AAA Mould is a full service, single source supplier of quality Plastic Injection molds and custom plastic injection molded components and products. We can work with your finished design -- or participate in its initial development stage. From concept development through tool fabrication, parts production, decorating and packaging of your finished product.

We have the resources and experience to produce your most challenging or simple designs. Through our trusted network we are also able to source and supply die casting components, metal stamping parts and CNC process parts, this combined with our assembly and packaging operations make us your trusted choice for finished product supply in China.

We welcome the opportunity to provide you with engineered solutions to your most challenging injection moulds, plastic injection molding and assembly operations.

AAA Mould

AAA Mould Company information
Http://www.aaa-mould.com

Tel:+86-755-29773292/29773293
Fax:+86-755-29773291-8019
E-mail: info@aaa-mould.com

Inside View of Mould Making Shop

AAA Mould	**AAA Mould Company information** **Http://www.aaa-mould.com**	Tel:+86-755-29773292/29773293 Fax:+86-755-29773291-8019 E-mail: info@aaa-mould.com

180° Panorama of Mould Making Shop

Tel:+86-755-29773292/29773293
Fax:+86-755-29773291-8019
E-mail: info@aaa-mould.com

Engineering Capabilities

AAA mould has in excess of twenty professionally trained and experienced mould engineers. The majority have graduated from the local well renowned University. They understand and are conversant with international export mould standards. (DME, HASCO etc.)

Our engineers are thoroughly conversant with Pro /Engineer (Pro/E) allowing conversion of CAD drawings to model and CAM by UG.

AAA Mould	**AAA Mould Company information** **Http://www.aaa-mould.com**	Tel:+86-755-29773292/29773293 Fax:+86-755-29773291-8019 E-mail: info@aaa-mould.com

One View of Our Designers Team

Tel:+86-755-29773292/29773293
Fax:+86-755-29773291-8019
E-mail: info@aaa-mould.com

Marketing Department :

With a strong English speaking project team all moulds are scheduled from quotation, order to final delivery ensuring customer satisfaction. Customer mould modification requests are handled with the same professional approach as the original order minimising final delivery delays.

AAA Mould

AAA Mould Company information
Http://www.aaa-mould.com

Tel:+86-755-29773292/29773293
Fax:+86-755-29773291-8019
E-mail: info@aaa-mould.com

Marketing team members office

Tel:+86-755-29773292/29773293
Fax:+86-755-29773291-8019
E-mail: info@aaa-mould.com

Quality:

Complete Documentation and Traceability
- Steel materials from brand manufacturer with certification
- Mold steel dimension control
- Machining process inspection

- Electrode inspection and measurement
- Heat treating with certification.
- CPK (Process Capability Index)
- FAI (First Article Inspection)
- Molding data record

Technical and quality reports are available at all times to our partners and customers, this ensures up to date information on the mould manufacture timing and processes.

Tel:+86-755-29773292/29773293
Fax:+86-755-29773291-8019
E-mail: info@aaa-mould.com

Our Inspection Dept.

AAA Mould Company information
Http://www.aaa-mould.com

Tel:+86-755-29773292/29773293
Fax:+86-755-29773291-8019
E-mail: info@aaa-mould.com

Conference & Sample Display Room

Tel:+86-755-29773292/29773293
Fax:+86-755-29773291-8019
E-mail: info@aaa-mould.com

Full View of our EDM and CNC Facilities

AAA Mould Company information
Http://www.aaa-mould.com

Tel:+86-755-29773292/29773293
Fax:+86-755-29773291-8019
E-mail: info@aaa-mould.com

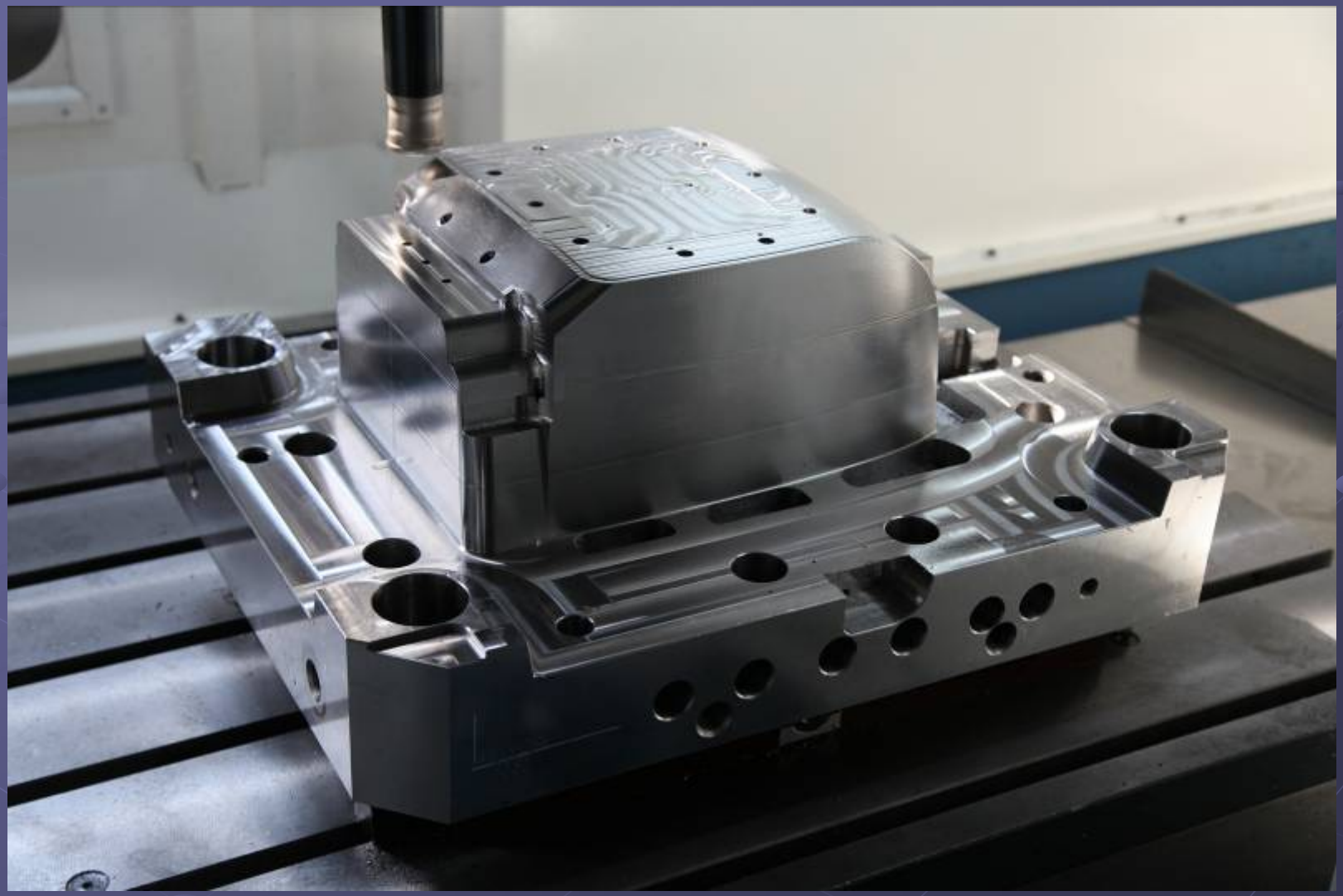

Mould is on CNC machine proceed

AAA Mould Company information
Http://www.aaa-mould.com

Tel:+86-755-29773292/29773293
Fax:+86-755-29773291-8019
E-mail: info@aaa-mould.com

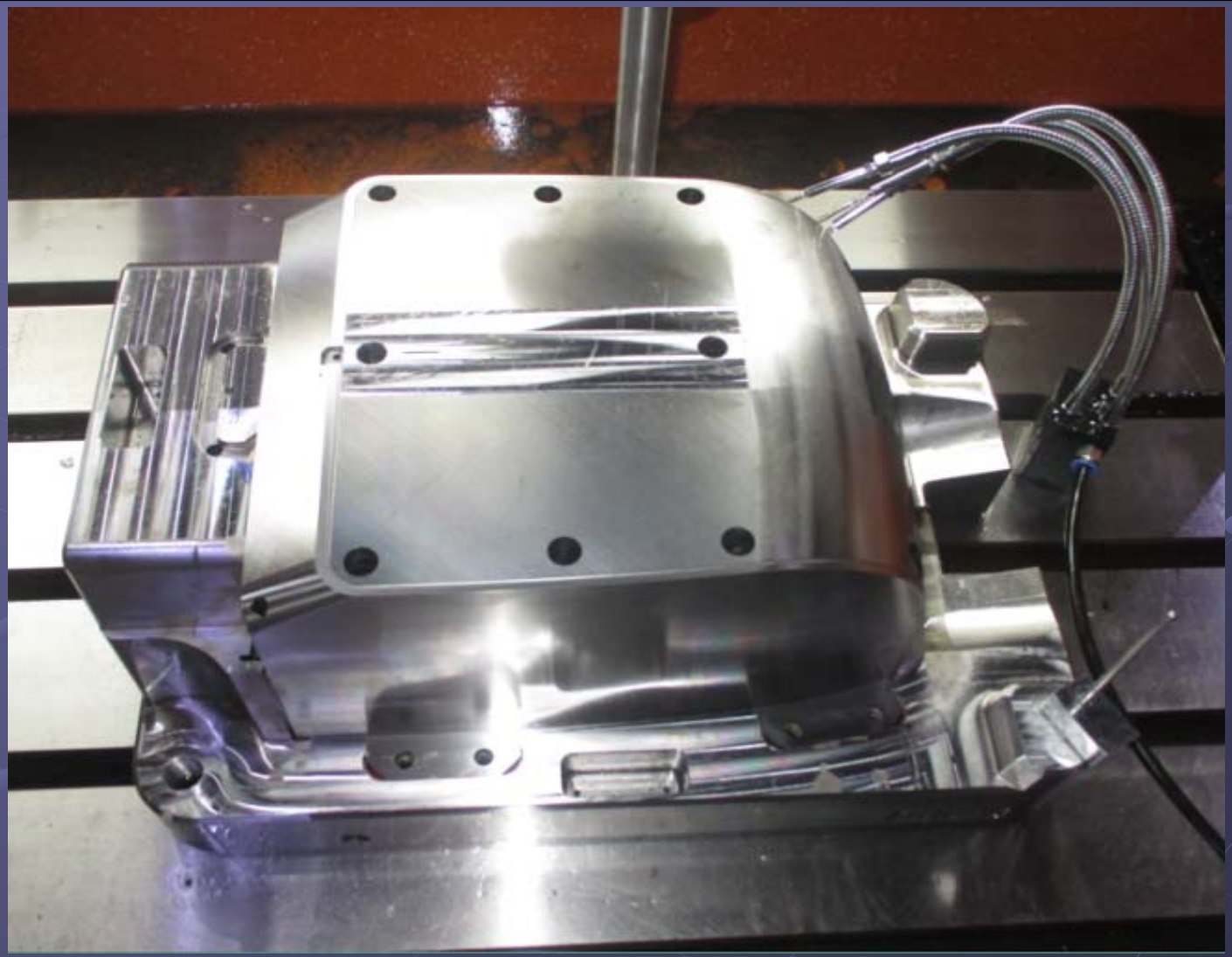

Mould is on EDM Machine proceed

Tel:+86-755-29773292/29773293
Fax:+86-755-29773291-8019
E-mail: info@aaa-mould.com

Full View of Injection Molding Plant

Tel:+86-755-29773292/29773293
Fax:+86-755-29773291-8019
E-mail: info@aaa-mould.com

One View of in-house 2K Molding Machine

AAA Mould Company information
Http://www.aaa-mould.com

Tel:+86-755-29773292/29773293
Fax:+86-755-29773291-8019
E-mail: info@aaa-mould.com

Some Assemble Parts

Tel:+86-755-29773292/29773293
Fax:+86-755-29773291-8019
E-mail: info@aaa-mould.com

Some Assemble Parts

AAA Mould Company information
Http://www.aaa-mould.com

Tel:+86-755-29773292/29773293
Fax:+86-755-29773291-8019
E-mail: info@aaa-mould.com

Some Assemble Parts- Ash-Bin

AAA Mould Company information
Http://www.aaa-mould.com

Tel:+86-755-29773292/29773293
Fax:+86-755-29773291-8019
E-mail: info@aaa-mould.com

Some Assemble Parts-Ash-Bin

AAA Mould Company information
Http://www.aaa-mould.com

Tel:+86-755-29773292/29773293
Fax:+86-755-29773291-8019
E-mail: info@aaa-mould.com

Some Assemble Parts

AAA Mould Company information
Http://www.aaa-mould.com

Tel:+86-755-29773292/29773293
Fax:+86-755-29773291-8019
E-mail: info@aaa-mould.com

2K Parts

AAA Mould Company information
Http://www.aaa-mould.com

Tel:+86-755-29773292/29773293
Fax:+86-755-29773291-8019
E-mail: info@aaa-mould.com

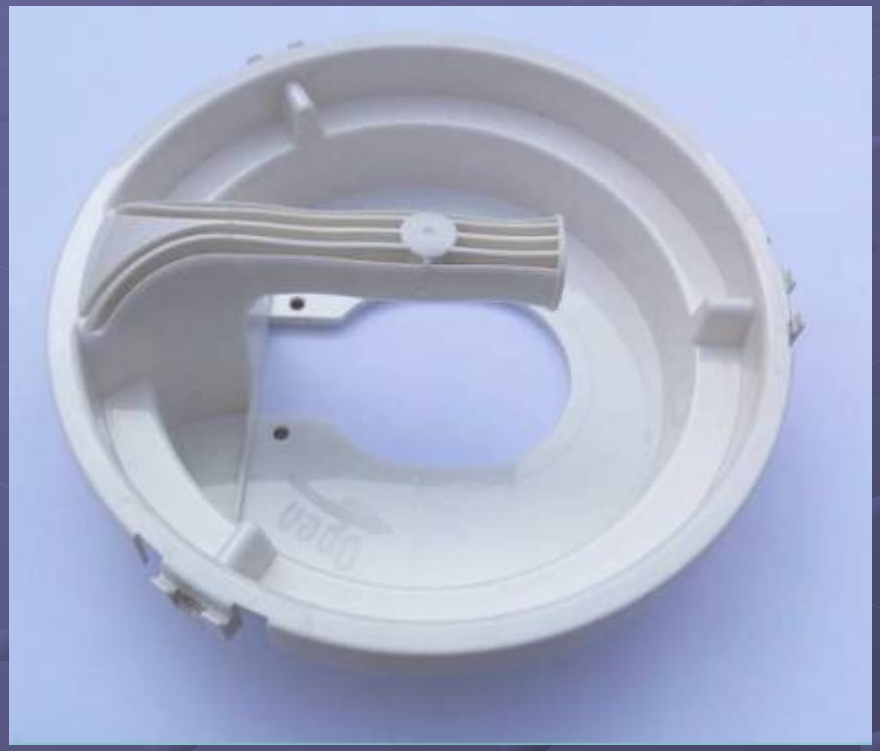

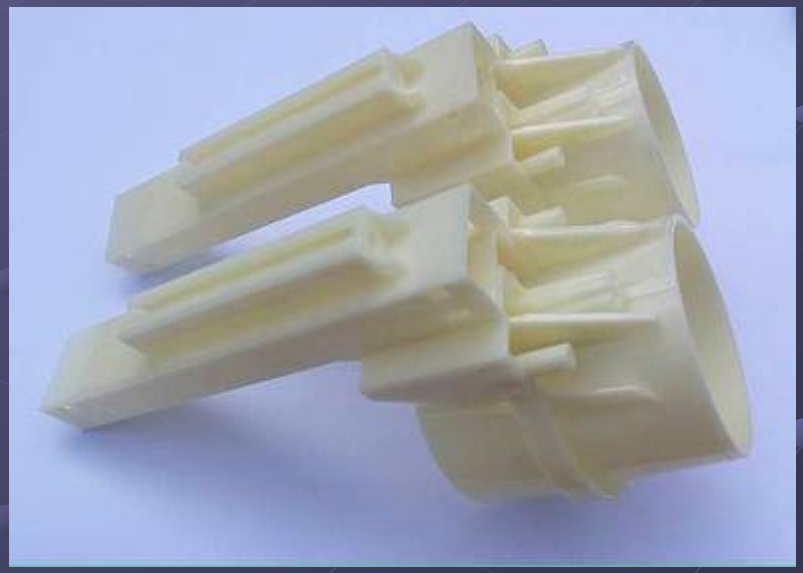

Some Industrial Parts

AAA Mould Company information
Http://www.aaa-mould.com

Tel:+86-755-29773292/29773293
Fax:+86-755-29773291-8019
E-mail: info@aaa-mould.com

Some Automobile Parts

AAA Mould Company information
Http://www.aaa-mould.com

Tel:+86-755-29773292/29773293
Fax:+86-755-29773291-8019
E-mail: info@aaa-mould.com

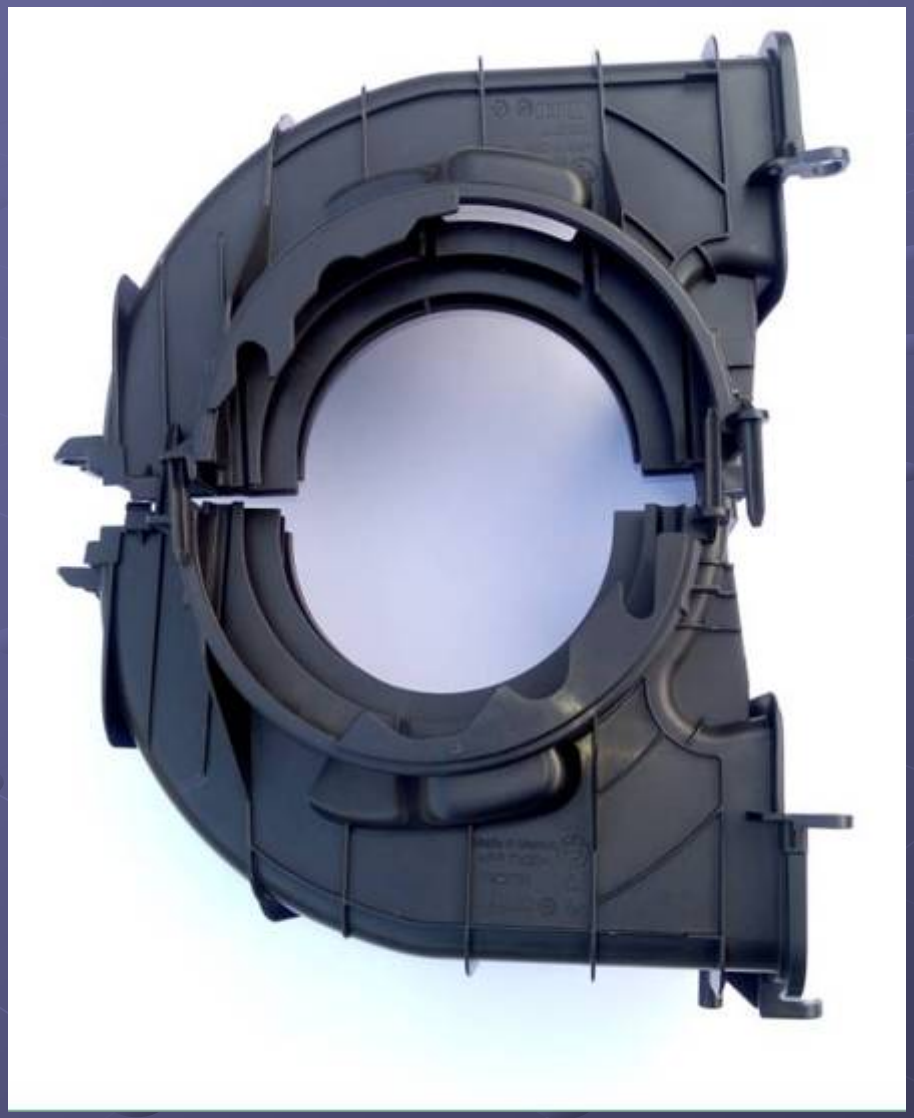

Some Automobile Parts

AAA Mould

AAA Mould Company information
Http://www.aaa-mould.com

Tel:+86-755-29773292/29773293
Fax:+86-755-29773291-8019
E-mail: info@aaa-mould.com

Some Automobile Parts

AAA Mould	**AAA Mould Company information** **Http://www.aaa-mould.com**	Tel:+86-755-29773292/29773293 Fax:+86-755-29773291-8019 E-mail: info@aaa-mould.com

Some Automobile Parts

AAA Mould Company information
Http://www.aaa-mould.com

Tel:+86-755-29773292/29773293
Fax:+86-755-29773291-8019
E-mail: info@aaa-mould.com

Some Parts For Airbus

Seat Armrest Parts

AAA Mould

AAA Mould Company information
Http://www.aaa-mould.com

Tel:+86-755-29773292/29773293
Fax:+86-755-29773291-8019
E-mail: info@aaa-mould.com

Tissue Box

Handle Part of Toolbox

2K Parts

AAA Mould Company information
Http://www.aaa-mould.com

Tel:+86-755-29773292/29773293
Fax:+86-755-29773291-8019
E-mail: info@aaa-mould.com

Middle-size Parts

AAA Mould Company information
Http://www.aaa-mould.com

Tel:+86-755-29773292/29773293
Fax:+86-755-29773291-8019
E-mail: info@aaa-mould.com

Large-size Parts

AAA Mould

Mould manufacturing

AAA Mould

Injection moulding